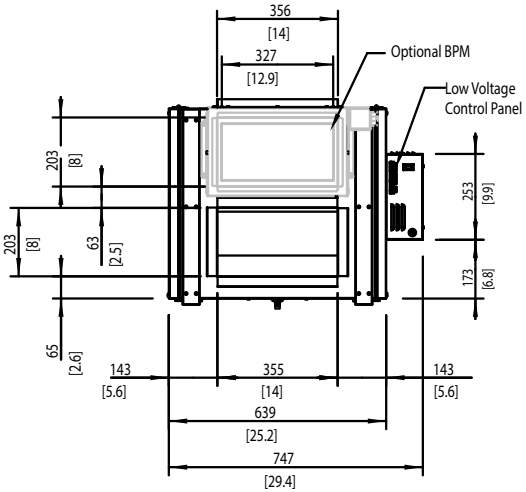

LEFT VIEW

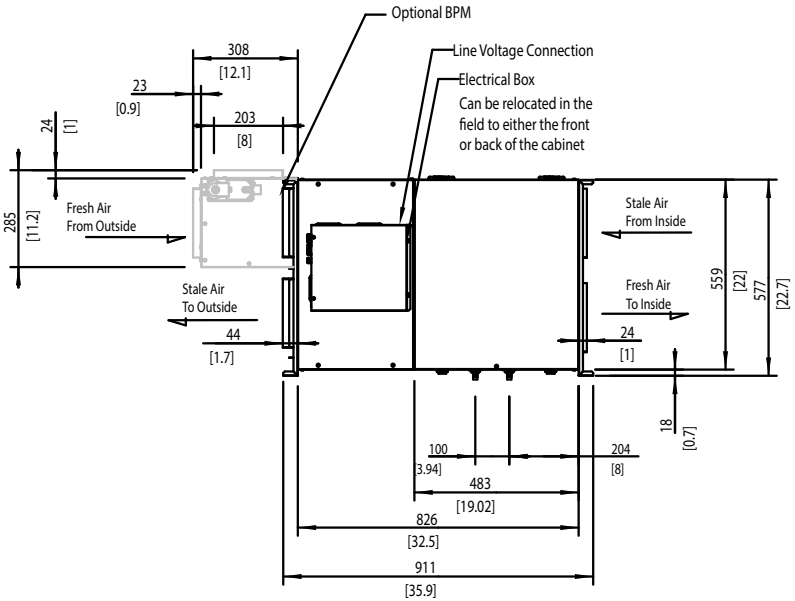

FRONT VIEW

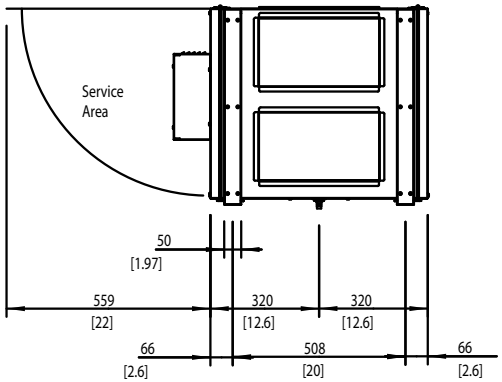

RIGHT VIEW

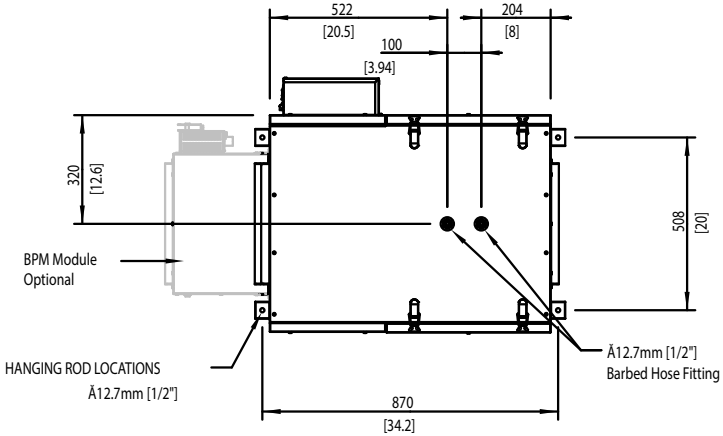

BOTTOM VIEW

Model: SHR 450 SER 450	NTS	E400047

fantech®
a systemair company