25VNA4
Infinity™ Variable Speed Heat Pump with Greenspeed™ Intelligence
2 to 5 Nominal Tons

Carrier

Turn to the experts

Installation Instructions

NOTE: Read the entire instruction manual before starting the installation.

Table of contents

PAGE NO.

SAFETY CONSIDERATIONS 2
Inverter Cover 2
Installation Recommendations 2
Installation 3
Step 1 – Check Equipment and Job Site 3
Unpack Unit 3
Inspect Equipment 3
Step 2 – Install on a Solid, Level Mounting Pad 3
Step 3 – Clearance Requirements 4
Step 4 – Operating Ambient 4
Step 5 – Elevate Unit 4
Step 6 – In Long-Line Applications, Install Liquid-Line Solenoid Valve (LSV) 4
Step 7 – Make Piping Connections 4
Table 1 – Refrigerant Connections and Recommended Liquid and Vapor Tube Diameters (in.) 5
Table 2 – Accessory Usage 5
Outdoor Unit Connected to Factory-Approved Indoor Unit 6
Install Liquid-Line Filter Drier Indoor 6
Refrigerant Tubing connection Outdoor 6
No Installation of Adapter Tube 6
Sweat Connections 6
Evacuate Refrigerant Tubing and Indoor Coil 6
Deep Vacuum Method 6
Final Tubing Check 7
Step 8 – Make Electrical Connections 7
Route Ground and Power Wires 7
Connect Ground and Power Wires 7
Connect Control Wiring 7
General Information 7
Final Wiring Check 7
Step 9 – Compressor Stator Heat 7
Airflow Setup for Infinity Control Furnace or FE Fan Coil (communicating) 7
Step 10 – Install Accessories 7
Step 11 – Start-Up & Charging 8
Follow these steps to properly start up the system: 8
Step 12 – Heating Check Charge 10
Step 13 – Pumpdown & Evacuation 11
Evacuation and Recovery of Refrigerant from within 25VNA . 11
Step 14 – System Functions and Major Components 12
Primary Control Module 12
Utility Interface With Infinity Control 12
Infinity Control, Green Communications (COMM) Light 12
Amber Status Light 14

PAGE NO.

5x7 LED Matrix 14
VFD Communications Light 14
Bluetooth® Module 14
Variable Frequency Drive (VFD) 14
Table 3 – VFD LED Indicator Functions 14
Input Filter Board 15
Reactors 15
Variable Speed Compressor 15
Time Delays 15
Heating Electronic Expansion Valve (EXV-H) 15
Vapor Injection Electronic Expansion Valve (EXV-VI) 15
BLDC Inverter-Controlled Fan Motor 15
Pressure Equalization Valve (PEV) 15
High Pressure Switch 15
Outdoor Pressure Transducers 15
Stator Heater Operation 15
Infinity Controlled low ambient cooling 15
Defrost 15
Troubleshooting 16
Systems Communication Failure 16
Model Plug 16
Table 4 – Model Plug Information 16
Pressure Switch Protection 16
Compressor Protection 16
Line Voltage Diagnostics 16
Forced Defrost Pins (J9) 16
Temperature Thermistors 16
Table 5 – Resistance Values versus Temperature 16
Table 6 – ODT Resistance Values versus Temperatures 16
Outdoor Air Thermistor 16
Outdoor Coil Thermistor 17
Suction Thermistor (OST) 17
Discharge Thermistor (ODT) 17
Failed Thermistor Default Operation 17
Variable Speed Compressor Winding Resistance 17
Table 7 – Variable Speed Compressor Resistances (winding resistance at 68°F? (20°F) 17
Fan Motor 17
Status Codes 18
Status Code Recall Mode 18
Emergency Mode Connections with a Conventional Thermostat18
Table 8 – Fault Code Table 19
Table 9 – Malfunction Lockout Durations 21
FINAL CHECKS 22
CARE AND MAINTENANCE 22

SAFETY CONSIDERATIONS

Improper installation, adjustment, alteration, service, maintenance, or use can cause explosion, fire, electrical shock, or other conditions which may cause death, personal injury, or property damage. Consult a qualified installer, service agency, or your distributor or branch for information or assistance. The qualified installer or agency must use factory-authorized kits or accessories when modifying this product. Refer to the individual instructions packaged with the kits or accessories when installing.

Follow all safety codes. Wear safety glasses, protective clothing, and work gloves. Use quenching cloth for brazing operations. Have fire extinguisher available. Read these instructions thoroughly and follow all warnings or cautions included in literature and attached to the unit. Consult local building codes and current editions of the National Electrical Code (NEC) NFPA 70. In Canada, refer to current editions of the Canadian electrical code CSA 22.1.

Recognize safety information. This is the safety-alert symbol ⚠. When you see this symbol on the unit and in instructions or manuals, be alert to the potential for personal injury. Understand these signal words; WARNING, and CAUTION. These words are used with the safety-alert symbol. WARNING signifies hazards which could result in personal injury or death. CAUTION is used to identify unsafe practices which would result in minor personal injury or product and property damage. NOTE is used to highlight suggestions which will result in enhanced installation, reliability, or operation.

⚠ WARNING

EXPLOSION HAZARD

Failure to follow this warning could result in death, serious personal injury, and/or property damage.

Never use air or gases containing oxygen for leak testing or operating refrigerant compressors. Pressurized mixtures of air or gases containing oxygen can lead to an explosion.

⚠ CAUTION

CUT HAZARD

Failure to follow this caution may result in personal injury.

Sheet metal parts may have sharp edges or burrs. Use care and wear appropriate protective clothing and gloves when handling parts.

⚠ WARNING

ELECTRICAL SHOCK HAZARD

Failure to follow this warning could result in personal injury or death.

Before installing, modifying, or servicing system, main electrical disconnect switch must be in the OFF position. There may be more than 1 disconnect switch. Lock out and tag switch with a suitable warning label.

⚠ WARNING

ELECTRICAL HAZARD - HIGH VOLTAGE!

Failure to follow this warning could result in personal injury or death.

Electrical components may hold charge. **DO NOT** remove control box cover for 2 minutes after power has been removed from unit.

PRIOR TO TOUCHING ELECTRICAL COMPONENTS:

Verify zero (0) voltage at inverter connections shown on inverter cover.

Inverter Cover

IMPORTANT: The inverter cover should NEVER be removed because inverter components are not serviceable. The inverter can be removed from unit with cover installed.

⚠ WARNING

UNIT OPERATION AND SAFETY HAZARD

Failure to follow this warning could result in personal injury or equipment damage.

Puron® refrigerant systems operate at higher pressures than standard R--22 systems. Do not use R--22 service equipment or components on Puron refrigerant equipment.

Indoor Thermostat Control Options

Model	Infinity Control
25VNA4	Yes*

*.Requires model SYSTXCCITC01-B or newer.

Installation Recommendations

In some cases noise in the living area has been traced to gas pulsations from improper installation of equipment.

1. Locate unit away from windows, patios, decks, etc. where unit operation sound may disturb customer.
2. In noise sensitive applications (such as bedrooms), when a lineset is mounted to ceiling joists or floor joists, the outdoor unit must be located at least 10 ft (3.05 m) away. If this is not possible, create a line set configuration with enough bends to provide 10 ft (3.05 m) of total line set length outside the dwelling
3. Ensure that vapor and liquid tube diameters are appropriate for unit capacity.
4. Run refrigerant tubes as directly as possible by avoiding unnecessary turns and bends.
5. Leave some slack between structure and unit to absorb vibration.
6. When passing refrigerant tubes through the wall, seal opening with RTV or other pliable silicon-based caulk (see Fig. 1).
7. Avoid direct tubing contact with water pipes, duct work, floor joists, wall studs, floors, and walls.
8. Do not suspend refrigerant tubing from joists and studs with a rigid wire or strap which comes in direct contact with tubing (see Fig. 1).
9. Ensure that tubing insulation is pliable and completely surrounds vapor tube.
10. When necessary, use hanger straps which are 1 in. wide and conform to shape of tubing insulation. (See Fig. 1)
11. Isolate hanger straps from insulation by using metal sleeves bent to conform to shape of insulation.

⚠ CAUTION

EQUIPMENT DAMAGE HAZARD

Failure to follow this caution may result in equipment damage.

If proper lineset routing techniques are not followed, variable speed systems can be susceptible to lineset transmitted noise inside the dwelling and, in extreme cases, tubing breakage.

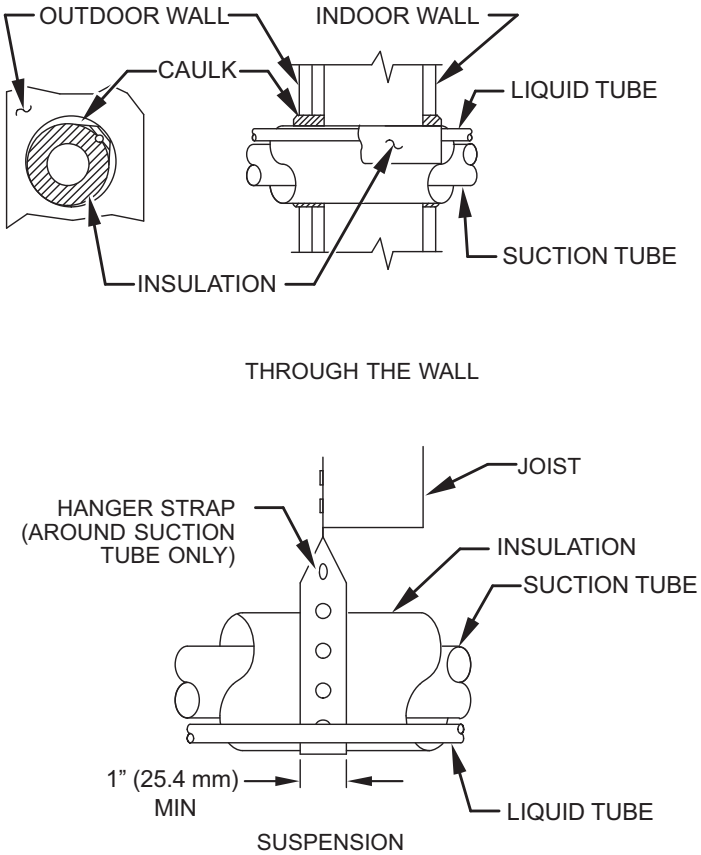

Fig. 1 – Connecting Tubing Installation

The outdoor unit contains the correct amount of refrigerant charge for operation with AHRI rated and factory-approved smallest indoor unit when connected by 15 ft (4.57 m) of field-supplied or factory accessory tubing.

Adjust refrigerant charge by adding or removing the charge to/from the unit depending on lineset length and indoor unit as calculated and displayed on the UI. The user interface (UI) calculates required charge adjustment and total system charge required. For proper unit operation, check refrigerant charge using charging information in the Check Charge section of this instruction.

IMPORTANT: Liquid-line size is 3/8-in. OD for all 25VNA applications including long line applications.

IMPORTANT: Always install the factory-supplied liquid-line filter drier. Obtain replacement filter driers from your distributor or branch.

Installation

IMPORTANT: Effective January 1, 2015, all split system and packaged air conditioners must be installed pursuant to applicable regional efficiency standards issued by the Department of Energy.

Specifications for this unit in residential new construction market require the outdoor unit, indoor unit (including metering device), refrigerant tubing sets, and filter drier, and muffler listed in pre-sale literature. There can be no deviation. Consult the Service Manual – Air Conditioners and Heat Pumps Using Puron Refrigerant to obtain required unit changes for specific applications and for R-22 retrofit.

Step 1 – Check Equipment and Job Site

Unpack Unit

Move to final location. Remove carton taking care not to damage unit.

This unit employs one louver spacer on each of the four sides to prevent louver movement during operation. The louver spacers are trapped between the coil surface and louver at the approximate center of each side (See Fig. 2). This louver spacer should be present and, if dislodged during shipment, must be reinstalled before unit is placed into operation.

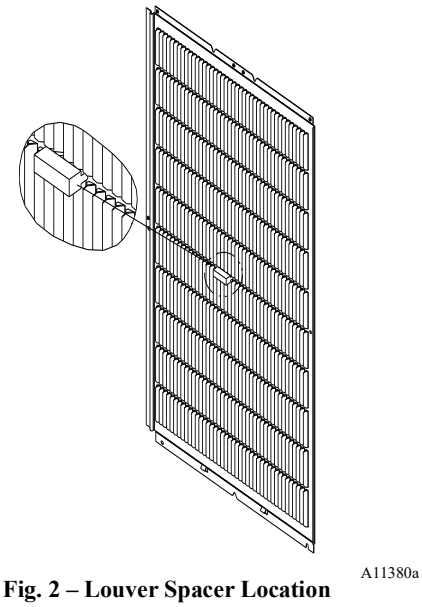

Fig. 2 – Louver Spacer Location

Inspect Equipment

File claim with shipping company prior to installation if shipment is damaged or incomplete. Locate unit rating plate on unit corner panel. It contains information needed to properly install unit. Check rating plate to be sure unit matches job specifications.

Step 2 – Install on a Solid, Level Mounting Pad

If conditions or local codes require the unit be attached to pad, tie down bolts should be used and fastened through knockouts provided in unit base pan. Refer to unit mounting pattern in Fig. 3 to determine base pan size and knockout hole location.

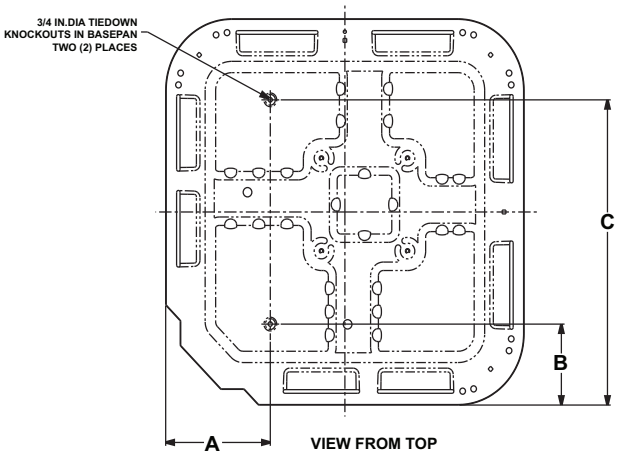

UNIT BASE PAN Dimension in. (mm)	TIEDOWN KNOCKOUT LOCATIONS in. (mm)		
	A	B	C
35 X 35 (889 X 889)	9–1/8 (231.8)	6–9/16 (166.7)	28–7/16 (722.3)

A05177

Fig. 3 – Tiedown Knockout Locations

For hurricane tie downs, contact distributor for details and PE (Professional Engineer) Certification, if required.

On rooftop applications, mount on level platform or frame. Place unit above a load-bearing wall and isolate unit and tubing set from structure. Arrange supporting members to adequately support unit and minimize transmission of vibration to building. Consult local codes governing rooftop applications.

Roof mounted units exposed to winds above 5 mph may require wind baffles. Consult the Service Manual - Residential Split System Air Conditioners and Heat Pumps Using Puron Refrigerant for wind baffle construction.

NOTE: Unit must be level to within ±2° (±3/8 in./ft,±9.5 mm/m.) per compressor manufacturer specifications.

Step 3 – Clearance Requirements

When installing, allow sufficient space for airflow clearance, wiring, refrigerant piping, and service. Allow 24 in. (609.6 mm) clearance to service end of unit and 48 in. (1219.2 mm) (above unit. For proper airflow, a 6-in. (152.4 mm) clearance on 1 side of unit and 12-in. (304.8 mm) on all remaining sides must be maintained. Maintain a distance of 24 in. (609.6 mm) between units. Position so water, snow, or ice from roof or eaves cannot fall directly on unit.

On rooftop applications, locate unit at least 6 in. (152.4 mm) above roof surface.

Step 4 – Operating Ambient

The minimum outdoor operating ambient in cooling mode is 55°F (12.78°C) without low ambient cooling enabled, and the maximum outdoor operating ambient in cooling mode is 125°F (51.67°C). The maximum heating operation ambient is 66°F (18.9°C). Compressor protections prevent operation below -10 to -20°F.

Step 5 – Elevate Unit

Elevate unit per local climate and code requirements to provide clearance above estimated snowfall level and ensure adequate drainage of unit.

⚠ CAUTION

UNIT OPERATION HAZARD

Failure to follow this caution may result in equipment damage or improper operation.

Do not allow water and/or ice to build up in base pan.

⚠ CAUTION

UNIT OPERATION HAZARD

Failure to follow this caution may result in equipment damage or improper operation.

Locate the unit in such a way that it is stable in all circumstances including adverse weather conditions.

Step 6 – In Long-Line Applications, Install Liquid-Line Solenoid Valve (LSV)

For refrigerant piping arrangements with equivalent lengths of greater than 80 ft. (24.38 m) and/or when elevation difference between indoor and outdoor unit is greater than ±20 ft. (±6.10 m), follow the piping configuration and liquid line solenoid valve (LSV) accessory requirements from the Residential Piping and Long-line guideline. CCH, start gear and piston changes do not apply. If required by Long-Line Guideline, install LSV kit, part no. KHALS0401LLS, specifically designed for Puron® refrigerant heat pumps. LSV should be installed within 2 ft. (0.61 m) of outdoor unit with flow arrow pointing toward outdoor unit.

Make the necessary electrical connections as shown in Fig. 4 and Fig. 5 and by following the Installation Instructions included with accessory kit.

IMPORTANT: Flow arrow must point toward outdoor unit.

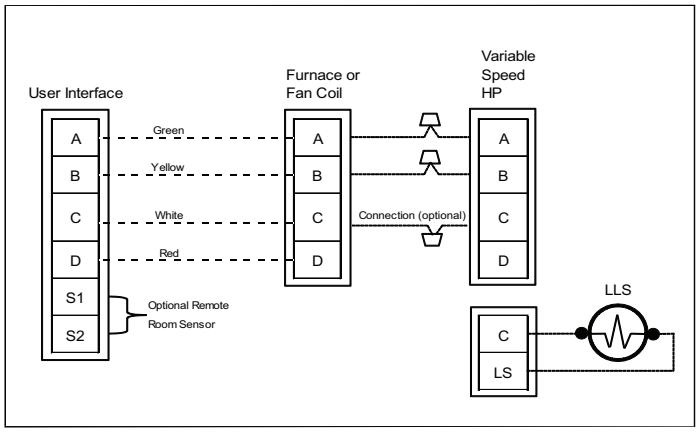

A180243

Fig. 4 – Liquid Line Solenoid Electrical Connection (Required for long line applications)

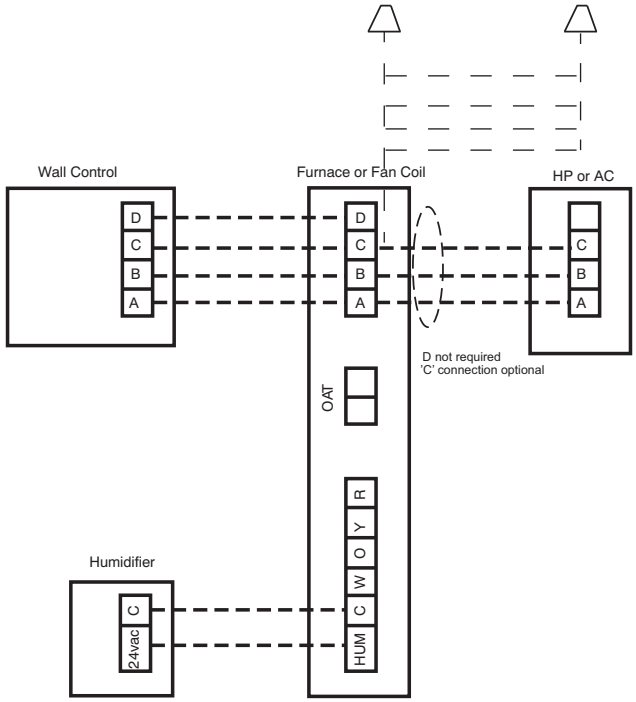

A200204

Fig. 5 – Infinity Furnace or Fan Coil Wiring with Communicating Variable Speed HP

Step 7 – Make Piping Connections

⚠ WARNING

PERSONAL INJURY AND UNIT DAMAGE HAZARD

Failure to follow this warning could result in personal injury or death.

Relieve pressure and recover all refrigerant before system repair or final unit disposal. Use all service ports and open all flow-control devices, including solenoid valves.

⚠ CAUTION

UNIT DAMAGE HAZARD

Failure to follow this caution may result in equipment damage or improper operation.

Do not leave system open to atmosphere any longer than minimum required for installation. POE oil in compressor is extremely susceptible to moisture absorption. Always keep ends of tubing sealed during installation.

⚠ CAUTION

UNIT DAMAGE HAZARD

Failure to follow this caution may result in equipment damage or improper operation.

If ANY refrigerant tubing is buried, provide a 6 in. (152.4 mm) vertical rise at service valve. Refrigerant tubing lengths up to 36 in. (914.4 mm) may be buried without further special consideration. Do not bury lines longer than 36 in. (914.4 mm).

Outdoor units may be connected to indoor section using accessory tubing package or field-supplied refrigerant grade tubing of correct size and condition. For tubing requirements beyond 80 ft. (24.38 m), substantial capacity and performance losses can occur. Follow the pipe sizing recommendations in the 25VNA Product data to manage these losses.

Refer to Table 1 for field tubing diameters. Refer to Table 2 for accessory requirements.

Table 1 – Refrigerant Connections and Recommended Liquid and Vapor Tube Diameters (in.)

UNIT SIZE	LIQUID		VAPOR*		
	Connection Diameter	Tube Diameter	Connection Diameter	Max (Rated) Diameter	Minimum Tube Diameter
25VNA424	3/8	3/8	3/4	3/4	5/8
25VNA436	3/8	3/8	7/8	7/8	5/8
25VNA448	3/8	3/8	7/8	1-1/8	3/4
25VNA460	3/8	3/8	7/8	1-1/8	3/4

* Units are rated with 25 ft. (7.6 m) of lineset. See Product Data sheet for performance data when using different size and length line sets.

Notes:

1. Do not apply capillary tube indoor coils to these units.
2. For Tubing Set lengths between 80 and 200 ft. (24.38 and 60.96 m) horizontal and / or greater than 20 ft. (6.1 m) vertical differential, an accessory Liquid Line Solenoid must be installed.

Table 2 – Accessory Usage

ACCESSORY	REQUIRED FOR LOW-AMBIENT COOLING APPLICATIONS (Below 55°F/12.8_C)	REQUIRED FOR LONG LINE APPLICATIONS* (Over 80 ft/24.38 m)	REQUIRED FOR SEA COAST APPLICATIONS (Within 2 miles/3.22 km)
Stator Heater	Standard	Standard	Standard
Evaporator Freeze Protection	Standard with Infinity Control	No	No
Liquid-Line Solenoid Valve	No	Yes	No
Low-Ambient Control	Standard with Infinity Control	No	No
Puron Refrigerant Balance Port Hard-ShutOff TXV	Yes†	Yes†	Yes†
Support Feet	Recommended	Recommended	Recommended
Winter Start Control	Standard with Infinity Control	Standard with Infinity Control	Standard with Infinity Control
EMI Kit	No	No	No

*. For tubing set lengths between 80 and 200 ft. (24.38 and 60.96 m) horizontal or 20 ft. (6.10 m) vertical differential (total equivalent length), an accessory Liquid Line Solenoid must be installed.

†. Required on all indoor units. Standard on all new Puron refrigerant fan coils and furnace coils.

Outdoor Unit Connected to Factory-Approved Indoor Unit

Outdoor unit contains correct system refrigerant charge for operation with factory-approved, AHRI-rated smallest indoor unit when connected by 15 ft. (4.57 m) of field-supplied or factory-accessory tubing, and factory-supplied filter drier. Check refrigerant charge for maximum efficiency.

NOTE: If the indoor furnace coil width is more than the furnace casing width, refer to the indoor coil Installation Instructions for transition requirements.

Install Liquid-Line Filter Drier Indoor

Refer to Fig. 6 and install filter drier as follows on 24, 36 and 48 size models:

1. Braze 5-in. (127 mm) liquid tube to the indoor coil.
2. Wrap filter drier with damp cloth.
3. Braze filter drier to above 5-in. (127 mm) liquid tube.
4. Connect and braze liquid refrigerant tube to the filter drier.

⚠ CAUTION

UNIT DAMAGE HAZARD

Failure to follow this caution may result in unit damage or improper operation.
Installation of filter drier in liquid line is required.

Refer to Fig. 7 and install filter drier as follows on 60 size models:

1. After wrapping the liquid service valve with a wet cloth braze 5-in. (127 mm) liquid tube to the liquid service valve on outdoor unit.
2. Wrap filter drier with damp cloth.
3. Braze filter drier to above 5-in. (127 mm) liquid tube.
4. Connect and braze liquid refrigerant tube to the filter drier.

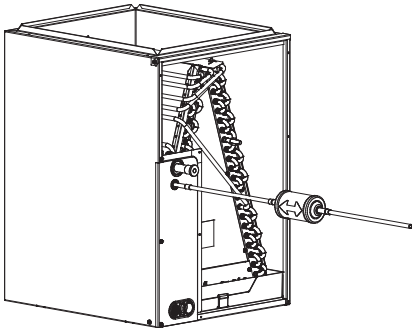

A05227

Fig. 6 – Liquid-Line Filter Drier for 2, 3 & 4 Ton Applications

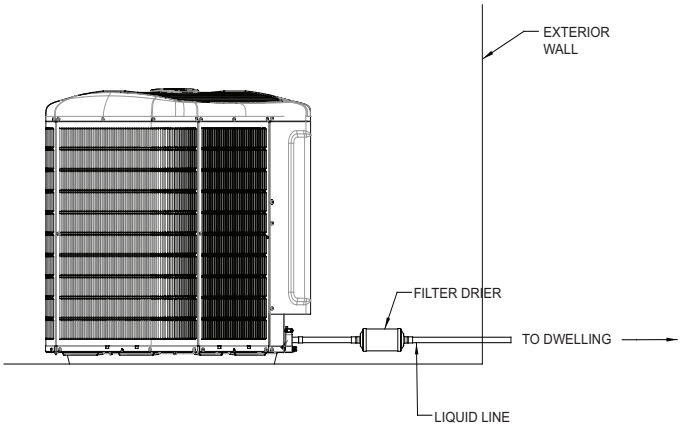

A200059

Fig. 7 – Liquid-Line Filter Drier for 5 Ton Applications

Refrigerant Tubing connection Outdoor

Connect vapor tube to fitting on outdoor unit vapor service valves (see Table 1).

No Installation of Adapter Tube

Although it is a heat pump this unit has a standard AC liquid service valve. An EXV inside the unit serves as the heating expansion device.

Sweat Connections

⚠ CAUTION

UNIT DAMAGE HAZARD

Failure to follow this caution may result in equipment damage or improper operation.

- Use a brazing shield
- Wrap service valves with wet cloth or heat sink material.

Use refrigerant grade tubing. Service valves are closed from factory and ready for brazing. After wrapping service valve with a wet cloth, braze sweat connections using industry accepted methods and materials. Consult local code requirements. Refrigerant tubing and indoor coil are now ready for leak testing. This check should include all field and factory joints.

Evacuate Refrigerant Tubing and Indoor Coil

⚠ CAUTION

UNIT DAMAGE HAZARD

Failure to follow this caution may result in equipment damage or improper operation.
Never use the system compressor as a vacuum pump.

Refrigerant tubes and indoor coil should be evacuated using the recommended deep vacuum method of 500 microns. The alternate triple evacuation method may be used. See Service Manual for triple evacuation method. Always break a vacuum with dry nitrogen prior to opening the refrigerant system for servicing.

Deep Vacuum Method

The deep vacuum method requires a vacuum pump capable of pulling a vacuum of 500 microns and a vacuum gauge capable of accurately measuring this vacuum depth. The deep vacuum method is the most positive way of assuring a system is free of air and liquid water. (See Fig. 8)

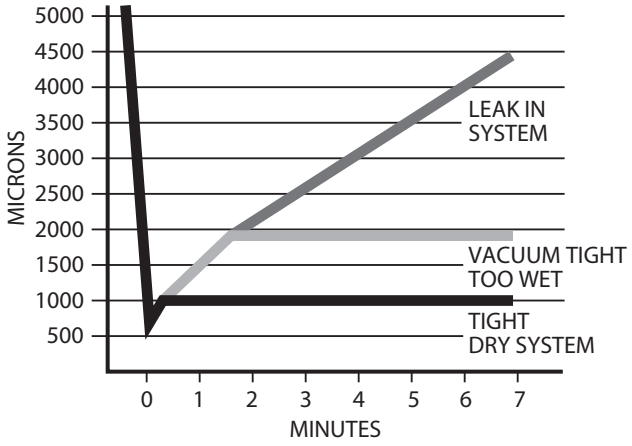

A95424

Fig. 8 – Deep Vacuum Graph

Final Tubing Check

IMPORTANT: Check to be certain factory tubing on both indoor and outdoor unit has not shifted during shipment. Ensure tubes are not rubbing against each other or any sheet metal. Pay close attention to feeder tubes, making sure wire ties on feeder tubes are secure and tight.

Step 8 – Make Electrical Connections

⚠ WARNING

ELECTRICAL SHOCK HAZARD

Failure to follow this warning could result in personal injury or death.

Do not supply power to unit with compressor terminal box cover removed.

Be sure field wiring complies with local and national fire, safety, and electrical codes, and voltage to system is within limits shown on unit rating plate. Contact local power company for correction of improper voltage. See unit rating plate for recommended circuit protection device.

NOTE: Operation of unit on improper line voltage constitutes abuse and could affect unit reliability. See unit rating plate. Do not install unit in system where voltage may fluctuate above or below permissible limits.

NOTE: Use copper wire only between disconnect switch and unit.

NOTE: Install branch circuit disconnect of adequate size per NEC to handle unit starting current. Locate disconnect within sight from and readily accessible from unit, per Section 440-14 of NEC.

Route Ground and Power Wires

Remove access panel to gain access to unit wiring. Extend wires from disconnect through power wiring hole provided and into unit control box.

⚠ WARNING

ELECTRICAL SHOCK HAZARD

Failure to follow this warning could result in personal injury or death.

The unit cabinet must have an uninterrupted or unbroken ground to minimize personal injury if an electrical fault should occur. The ground may consist of electrical wire or metal conduit when installed in accordance with existing electrical codes.

Connect Ground and Power Wires

Connect ground wire to ground connection in control box for safety. Connect power wiring to contactor as shown in Fig. 9.

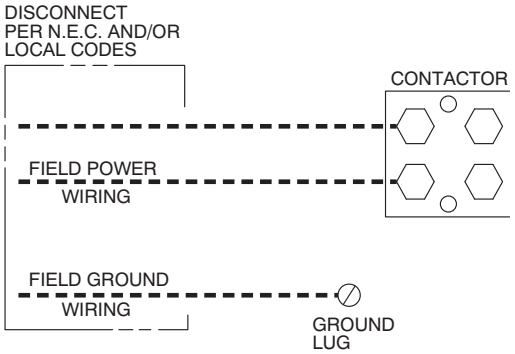

A91056

Fig. 9 – Line Power Connections

Connect Control Wiring

Connect to Infinity connections. Only two wires (AB) to Infinity capable indoor unit (furnace or fan coil) is required. Typical 4 wire (ABCD) may be connected (see Fig. 5)

IMPORTANT: This system requires the power supply to the outdoor unit, and the indoor unit, for the UI to communicate with the outdoor unit.

General Information

Use No. 18 AWG or larger color-coded, insulated (35°C minimum) wire for low voltage control wires.

All wiring must be NEC Class 2 and must be separated from incoming power leads.

Use furnace transformer, fan coil transformer, or accessory transformer for control power requirement of system accessories external to the OD unit. The outdoor unit has its own transformer power.

Installations using greater than 200 feet of low voltage wiring should consult the Infinity wall control manual for additional guidelines regarding daisy chaining wiring method and terminating resistors. Never route control wiring in parallel to high voltage power wires when possible as electrical noise may transfer and generate nuisance fault codes. Where low voltage control and high voltage wires must cross paths, do so at perpendicular angles to eliminate transferred noise.

If further communication issues exist, consider using shielded low voltage wires and only connect shielding to C terminal at end nearest indoor coil.

Final Wiring Check

IMPORTANT: Check factory wiring and field wire connections to ensure terminations are secured properly. Check wire routing to ensure wires are not in contact with tubing, sheet metal, etc.

Step 9 – Compressor Stator Heat

This unit has an internal stator heating function that will be energized during the off cycle. Furnish power to the unit a minimum of 24 hours before starting the unit for the first time.

The internal stator heating function is intelligently demanded by the system to prevent the compressor from being the coldest part of the system and, thus, enhancing the reliability. The stator heat will function as needed any time the outdoor unit is powered. The indoor unit and UI do not need to be installed for the stator heat to operate properly.

Airflow Setup for Infinity Control Furnace or FE Fan Coil (communicating)

This system can only be installed with Infinity-capable indoor and Infinity System Control . When using an Infinity control, airflow is automatically selected based on equipment size. The user has the option of selecting Comfort, Efficiency and Max airflow for Heating and/or Cooling modes. These should be selected based on balance between the homeowner's comfort and energy consumption expectations. See User Interface Installation Instructions for additional available adjustments.

NOTE: Ensure control is updated with the latest available software version.

Due to using a communicating control with the fan coil or the furnace, dip switch adjustments are not necessary. The outdoor unit configuration and the indoor airflows are determined by communicating control setup.

Verify that the PCM, VFD and wall control are the latest software before proceeding with the next steps.

Step 10 – Install Accessories

There are no refrigeration circuit or electrical accessories required or available for installation within the unit. External to the unit, the same accessories such as the liquid line solenoid, support feet, snow rack, wind baffle etc., are available on other Carrier units can also be used on this line of product. Refer to the individual Installation Instructions packaged with kits or accessories when installing.

Step 11 – Start-Up & Charging

⚠ CAUTION

UNIT OPERATION AND SAFETY HAZARD

Failure to follow this caution may result in minor personal injury, equipment damage or improper operation.
Observe the following:

1. Do not overcharge system with refrigerant.
2. Do not operate unit in a vacuum or at negative pressure.
3. Do not disable low pressure transducer or system safety devices such as discharge thermistor or the high pressure switch.
4. Dome temperatures may be hot.
5. Discharge thermistor is engaged tight on the discharge tube.

⚠ CAUTION

PERSONAL INJURY HAZARD

Failure to follow this caution may result in personal injury.
Wear safety glasses, protective clothing, and gloves when handling refrigerant.

⚠ CAUTION

ENVIRONMENTAL HAZARD

Failure to follow this caution may result in environmental damage.
Federal regulations require that you do not vent refrigerant to the atmosphere. Recover during system repair or final unit disposal.

Factory charge amount and desired subcooling are shown in the user interface (UI). To properly check or adjust charge, conditions must be favorable for subcooling charging in cooling mode. Favorable conditions exist when the outdoor temperature is between 65°F and 105°F and the indoor temperature is between 65°F and 80°F. If the temperatures are outside of these ranges, weigh-in charge only. If confirmation is needed, return and check subcooling when the temperatures are within the desired range.

Unit is factory charged for 15ft (4.57 m) of lineset and for smallest rated indoor coil combinations. If any refrigerant charge adjustment is required based on the indoor coil combination selected and the selected line set length, the UI will calculate and display the target subcooling and the amount of additional charge to be added. Therefore the UI is the source of information for charging the system correctly. Refrigerant charge adjustment amount for adding or removing 0.6 oz/ft (17.74 g/m) of 3/8 liquid line above or below 15ft (4.57 m) respectively, and an additional amount of refrigerant charge adjustment (2 lbs) for a large ID coil if required, is calculated and displayed by the UI. Perform a final charge check only when in cooling and OD is between 65°F (18°C) and 105°F (40.6°C).

NOTE: UI indicates acceptable conditions for subcool charging mode. Do not use subcooling charge method if outside 65°F (18°C) and 105°F (40.6°C) outdoor temperature. Subcool charging mode will not be available if conditions are not acceptable.

Follow these steps to properly start up the system:

1. After system is evacuated, close the disconnects to energize indoor unit, outdoor unit, and User Interface (UI). Do not attempt to operate the system in heating or cooling mode at this time. Mode: OFF. Vapor and liquid line service valves should be fully closed.
2. If the outdoor ambient temperature is between 65°F and 105°F and the indoor temperature is between 65F and 80F then the system will be charged using the subcooling method. At this time fully open the liquid and vapor service valves if the subcooling method is to be used.
3. If the user interface is new then the UI will proceed through a series of setup screens. Proceed through these setup screens until the equipment summary screen is reached (see Fig. 10). Verify that the correct equipment is shown on this screen. If the installed indoor unit is a furnace coil verify that this has been selected. The UI will then proceed through an airflow verification test and then return to the main screen.
4. Navigate to the service area by pressing MENU from main screen (see Fig. 11). Scroll down to service icon and hold until icon turns green. Once in the "Installation and Service" menu, select "Refrigerant Charging" (see Fig. 12).

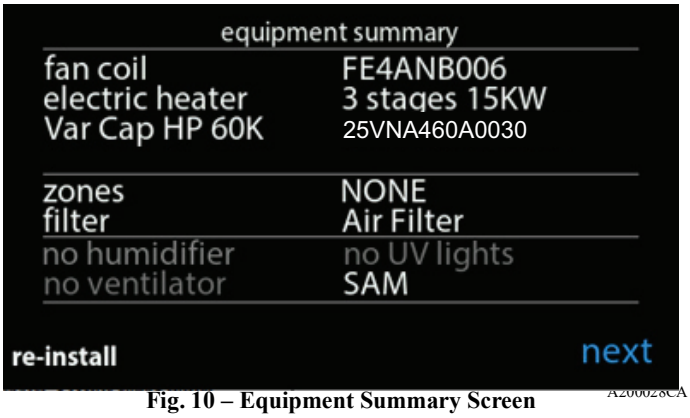

Fig. 10 – Equipment Summary Screen

A200028CA

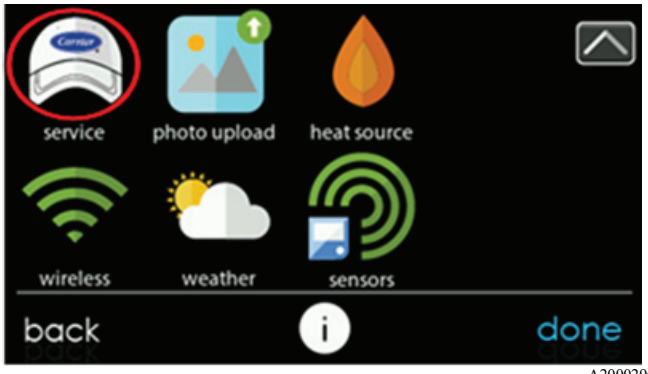

Fig. 11 – Service Icon

A200029CA

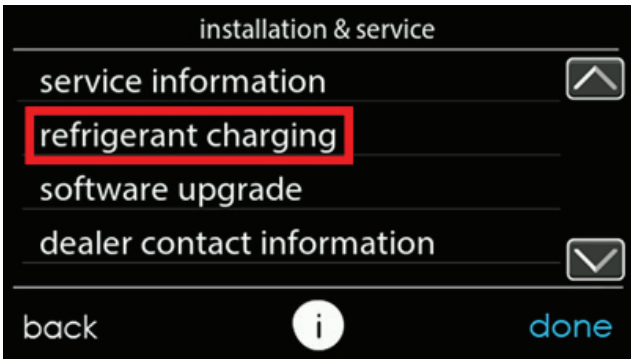

Fig. 12 – Select Refrigerant Charging

A20030

5. If the outdoor ambient temperature is between 65°F and 105°F and the indoor temperature is between 65°F and 80°F then select "subcool" (See Fig. 13).
6. The next screen will show the target subcooling that should be attained while charging (see Fig. 14). Before selecting "Start" verify that the service valves are open.
7. Upon selecting "Start" the system will enter into charging mode. The outdoor compressor and fan will operate at a fixed speed and the UI will display a stabilization time (see Fig. 15). Once this clock reaches zero the charge can be adjusted to meet the target subcooling.
8. Compare the subcooling taken at the liquid service valve to the subcooling target listed on the charging screen. Add refrigerant if the subcooling is low and remove charge if subcooling is high. Tolerance should be +0 and -2°F.
9. If any adjustment is necessary, add or remove the charge slowly (no greater than 0.5 lb per minute) and allow system to operate for 15 minutes to stabilize before declaring a properly charged system.
   The use of a commercial charge metering device (restrictor) such as Imperial liquid low side charger model 535-C or Watsco ChargeFaster model CH200 is recommended when adding refrigerant to an operating system. This prevents potential damage of liquid slugging of the compressor and allows the subcooling to stabilize quicker.
10. If the outdoor ambient is below 65°F or above 105°F then the refrigerant must be weighed in. Press the "weigh-in" option in the "refrigerant charge" screen (see Fig. 16).
11. Press the text "line set" and "vapor line" to choose line set length and vapor line diameter (see Fig. 17 and Fig. 18). After complete, press "next" to advance to next screen.
12. If this is a new install, i.e. the ODU is factory charged, then select "new install" in the "charging mode selection" screen (see Fig. 19)

⚠ CAUTION

UNIT OPERATION HAZARD

Failure to follow this caution may result in improper unit operation.

For new installations only: Add additional refrigerant due to indoor coil, line set and vapor line settings. Outdoor unit is pre-charged with weight of refrigerant shown on rating plate.

13. The "new install charge weigh-in" screen will show the additional charge that needs to be added to the system to account for the ID coil and line set (see Fig. 20).
14. If this is a complete re-charge then select "complete recharge" in the "charging mode selection" screen. This screen will show the total amount of charge to add for the indoor coil, line set, and outdoor unit (see Fig. 21). The "charge breakdown" screen shows the charge required for each component of the system.
15. Add additional required charge for line set and indoor coil size then fully open liquid and vapor service valves.
    Charge level should then be appropriate for the system to achieve rated capacity. The charge level could then be checked at another time when both the indoor and outdoor temperatures are in a more favorable range. This ensures maximum efficiency and reliability.
    If lineset is less than 15 feet (4.57 m) in length, charge removal may be necessary and will be shown as a negative number on UI screen. UI screen displays charge in lb and oz, while unit rating plate is in decimal format.

A20031

Fig. 13 – Select Refrigerant Subcooling

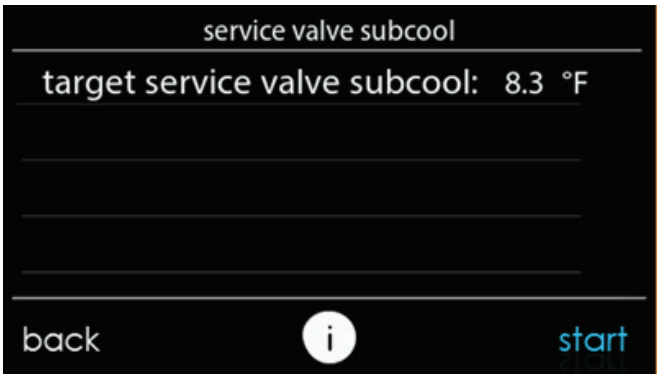

A20032

Fig. 14 – Liquid Service Valve Subcooling Target

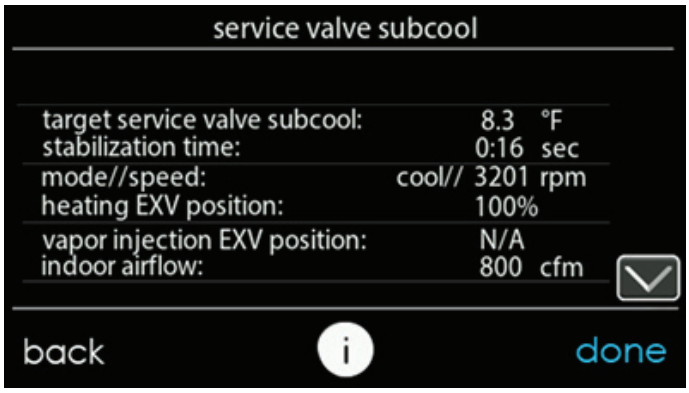

A20033

Fig. 15 – Charging Mode Information Screen

A20034

Fig. 16 – Weigh-in Option for charging below 65°F OAT and above 105°F OAT

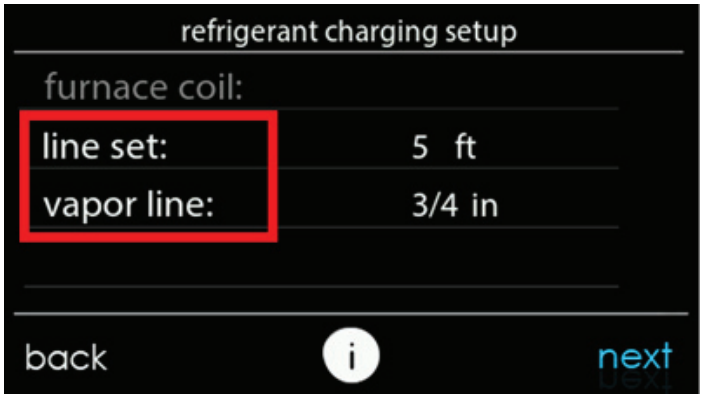

A20035

Fig. 17 – Select Line Set Length & Vapor Line Diameter

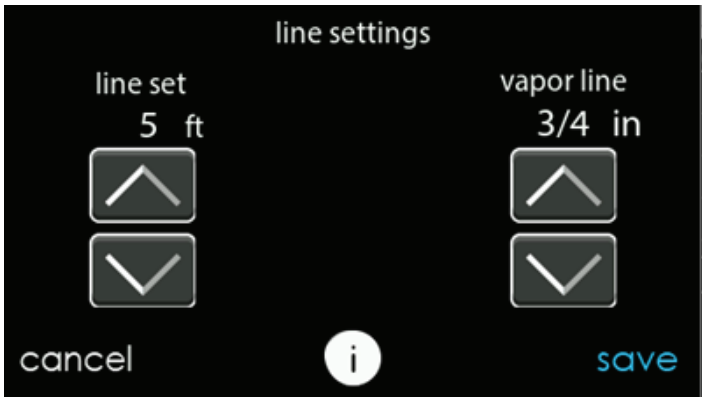

A20036

Fig. 18 – Adjust Line Set Length & Vapor Line Diameter that is Installed

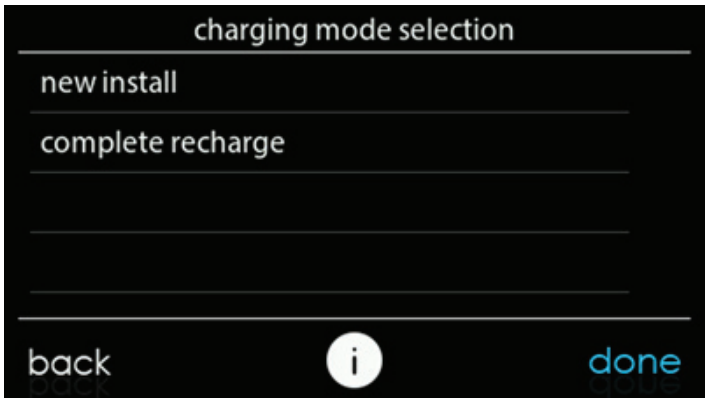

A20037

Fig. 19 – Charging Mode Selection

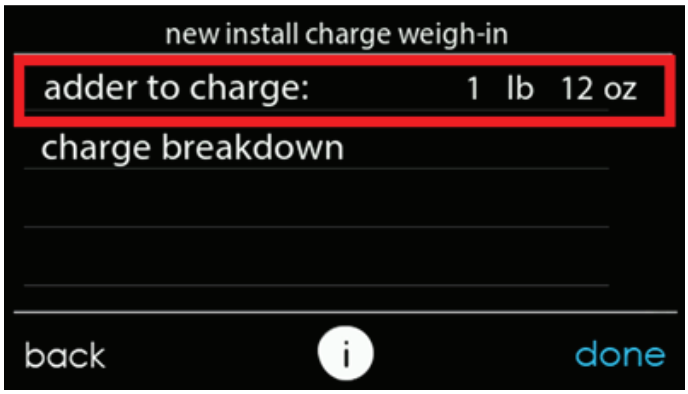

A20038

Fig. 20 – Additional Required Charge for New Installation

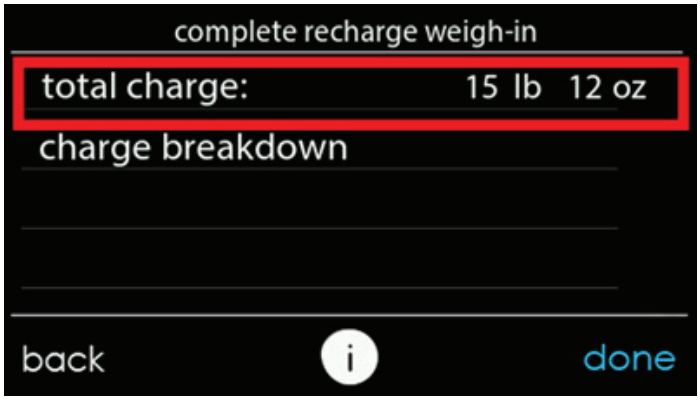

A20039

Fig. 21 – Total Charge Required for a Complete Charge

Step 12 – Heating Check Charge

In heating mode, the required charging method is by weigh-in. On new installation or complete recharge, refer to the refrigerant charging screen in the user interface (UI) to obtain the required charge adjustment and/or total charge required (see Fig. 20 & Fig. 21). Use the UI and Heating Check Charts (located on the inside of the control box cover) to check system operation during HEATING mode. The indoor conditions must be between 60°F (15.6ºC) and 80°F (26.7ºC) to check the charge. The outdoor coil must be dry and ice/frost free. Do not check for pressure agreement if the outdoor has rain, mist or snow present.

Use the force defrost mode, which is available by shorting the forced defrost pins (J9) for more than 5 seconds, to remove ice or frost from coil, if present, prior to checking the heating pressures.

To use the Heating Check Chart:

The user interface (UI) must be in Refrigerant Charging mode selected from the Installation and Service screen. The Charging Mode Selection screen will show selections for Weigh-In Charge Method or Heating Check Charge Method. Select Heating Check Charge Method. The Heating Check Charge method will only be displayed if the conditions are right for checking the charge in heating mode. When Heating Check Charge Method is selected, the system will operate by running with appropriate compressor speed, outdoor fan speed and indoor airflow.

The charts located on the inside of the control box cover indicate whether a correct relationship exists between system operating pressure and air temperature entering indoor and outdoor units. If pressure and temperature do not match on chart, system refrigerant charge may not be correct. **DO NOT USE CHART TO ADJUST REFRIGERANT CHARGE. IF CHARGE IS IN DOUBT, REMOVE CHARGE AND WEIGH-IN CORRECT CALCULATED REFRIGERANT CHARGE.**

NOTE: High pressure is at vapor service valve. Connect low side gauge to suction service port.

NOTE: When charging is necessary during heating season, charge must be weighed in accordance with unit rating plate, ±0.6 oz./ft (±17.74 g/m). of 3/8-in. liquid-line above or below 15 ft (4.57 m).

Step 13 – Pumpdown & Evacuation

Because this system has an inverter controlled compressor and EXV the conventional procedure cannot be used to "pump down" and isolate the refrigerant into the outdoor unit. The UI (User Interface) has provisions to assist in performing this function. Pump Down

1. Connect gages to liquid and vapor or suction capillary service ports to monitor operating pressures during and at completion of the procedure.
2. In the "installation and service" menu of the UI (see Fig. 11), go to "refrigerant charging" and then "pump down" (see Figs. 11 & 12).
3. Select mode to pump down in (COOL or HEAT), COOL mode allows refrigerant to be isolated in outdoor unit. HEAT mode allows the refrigerant to be isolated in indoor coil and lineset. Set desired time period. Default time period for the procedure is 120 minutes. See Fig. 22.
4. Select Start on UI to begin the pumpdown process. Unit will begin running in selected mode after a brief delay and a status screen will be displayed. See Fig. 23.
5. Close the liquid service valve.
6. The unit will run in selected mode with the low pressure protection set to indicate pumpdown is complete when the suction pressure drops below 20 psig. Compressor protections are still active to prevent damage to the compressor or inverter (high pressure, high current, etc.).
7. Once system indicates pumpdown complete or failure to complete shutdown, close vapor service valve.
8. A recovery system will be required to remove final quantity of refrigerant from indoor coil and line set.
9. Remove power from indoor and heat pump unit prior to servicing unit.

NOTE: A small quantity of charge remains in the OD unit that must be manually recovered if isolating refrigerant to indoor coil and lineset via HEAT mode PUMP DOWN.

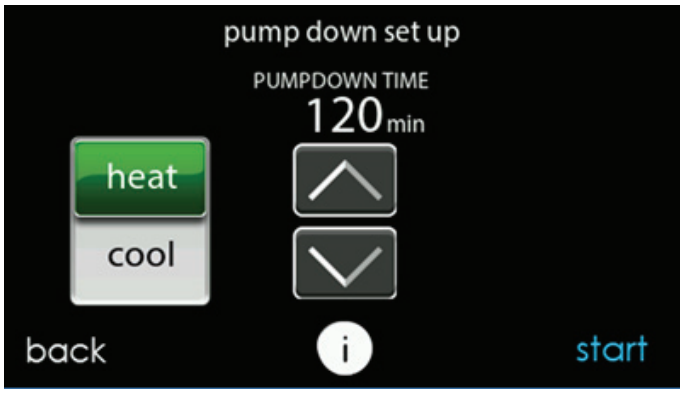

A20040

Fig. 22 – Pump Down Setup Screen

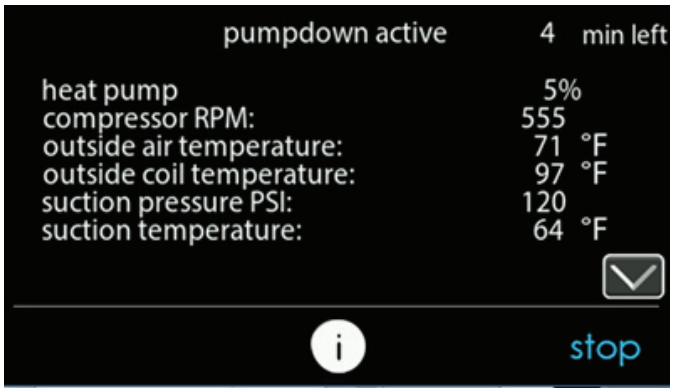

A20041

Fig. 23 – Pump Down Status Screen

Evacuation and Recovery of Refrigerant from within 25VNA

Because this system has an EXV for the heating expansion device, additional steps must be taken to open the EXV if the heat pump unit must be evacuated for service reasons. If the EXV is not open when pulling a vacuum or recovering refrigerant from the heat pump unit, extended evacuation time may be required and/or inadequate vacuum obtained. The UI (User Interface) has provisions to open the EXV for refrigerant recovery and/or evacuation.

1. Connect gages to liquid and vapor or suction capillary service ports to monitor operating pressures during and at completion of the procedure. Attach recovery system or vacuum pump to gage set as needed for the service procedure. The service valves must be open to evacuate the unit through the line set service ports. The suction capillary service port is a direct connection to the suction port of the compressor.
2. In the "installation and service" menu of the UI (see Fig. 11), go to "refrigerant charging" and then "evacuation" (see Fig. 12) and Fig. 13).
3. Set desired time period. Default time period for the procedure is 120 minutes. See Fig. 24.
4. Select START on UI to open the valve.
5. Begin evacuation or refrigerant recovery as required for the procedure after UI indicates the EXV is open. Power may be removed from heat pump after the UI indicates "READY TO EVACUATE." See Fig. 25.
6. Remove power from indoor and heat pump unit prior to servicing unit. The EXV will retain the open position.

NOTE: See service training materials for troubleshooting the EXV using EXV CHECK mode.

A20042

Fig. 24 – Evacuation Setup Screen

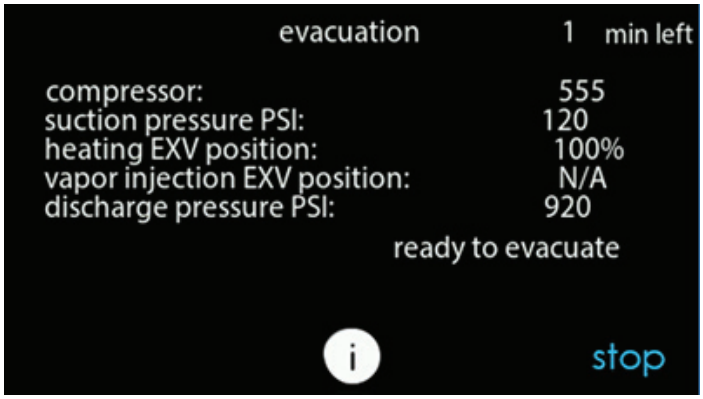

A20043

Fig. 25 – Evacuation Status Screen

Step 14 – System Functions and Major Components

The 25VNA models utilize an Infinity Communicating User Interface (UI). When a demand for cooling or heating exists, the wall control will direct theoutdoor unit to operate at the minimum required speed to satisfy demand. With a call for cooling or heating, the outdoor fan is energized followed by the compressor to run at a start speed. Once the start criteria is met the compressor and fan will ramp to the target demand. If continued operation at the initial speed does not satisfy demand, the system will ramp up in 60 RPM increments until it satisfies the demand. After coping with the higher demand, the unit returns to lower capacity operation until the demand is satisfied or until an increase in demand occurs. Ideal performance is achieved when system operates continuously at the lowest speed possible, minimizing variation in conditioned space temperatures while using minimal power.

As the unit operates at lower capacity, system vapor (suction) pressure will be higher than it is during a standard single-stage system operation or during a higher capacity operation.

When all demand is satisfied, the compressor will shut off. An internal pressure equalization valve will energize during the off-cycle to allow for easy start up at the next call for cooling or heating.

The user interface (UI) displays the operation mode and fault codes as specified in the troubleshooting section. See Table 8 for codes and definitions.

NOTE: Only one code will be displayed on the outdoor unit control board (the most recent, with the highest priority). The latest codes are stored and can be accessed via the UI.

Primary Control Module

The Primary Control Module (PCM) controls the various functions of the outdoor unit. The PCM has the following outputs:

1. Main EXV
2. Vapor Injection EXV
3. VFD Modbus communication
4. VFD low-voltage relay control
5. Reversing valve
6. Pressure Equalization valve
7. O signal
8. W signal
9. Liquid Line Solenoid

The PCM has the following inputs:

1. Outdoor discharge thermistor (ODT)
2. Outdoor ambient thermistor (OAT)
3. Outdoor coil thermistor (OCT)
4. Outdoor suction thermistor (OST)
5. Discharge & suction pressure transducers (OPT)
6. Service Interface communication port
7. CCN communication (ABCD plug)
8. Model plug
9. 24VAC input power

The PCM receives a cooling or heating demand from the wall control and determines the appropriate compressor, fan, reversing valve, PEV, and LLS action based upon the various sensor inputs.

Utility Interface With Infinity Control

The utility curtailment relay should be wired between the two UTIL connections on the control board for this Infinity Communicating System (see Fig. 26). This input allows a power utility device to interrupt compressor operation during peak load periods. When the utility sends a signal to shut the system down, the User Interface will display: "Curtailment Active". See UI installation instructions for setup details.

Infinity Control, Green Communications (COMM) Light

A green LED (COMM light) on the outdoor board (see Fig. 27) indicates successful communication with the other system products. The green LED will remain OFF until communication is established. Once a valid command is received, the green LED will turn ON continuously. If no communication is received within 2 minutes, the LED will be turned OFF until the next valid communication.

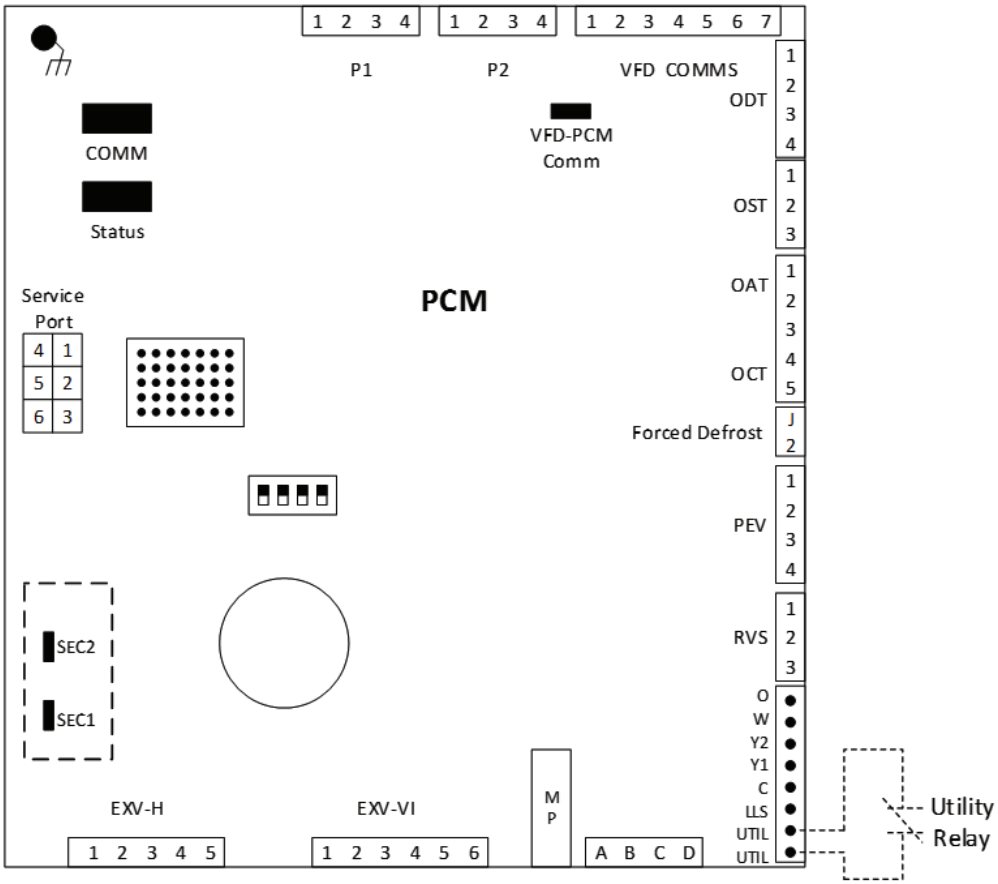

Fig. 26 – Variable Speed Control Board with optional Utility Relay

A200049

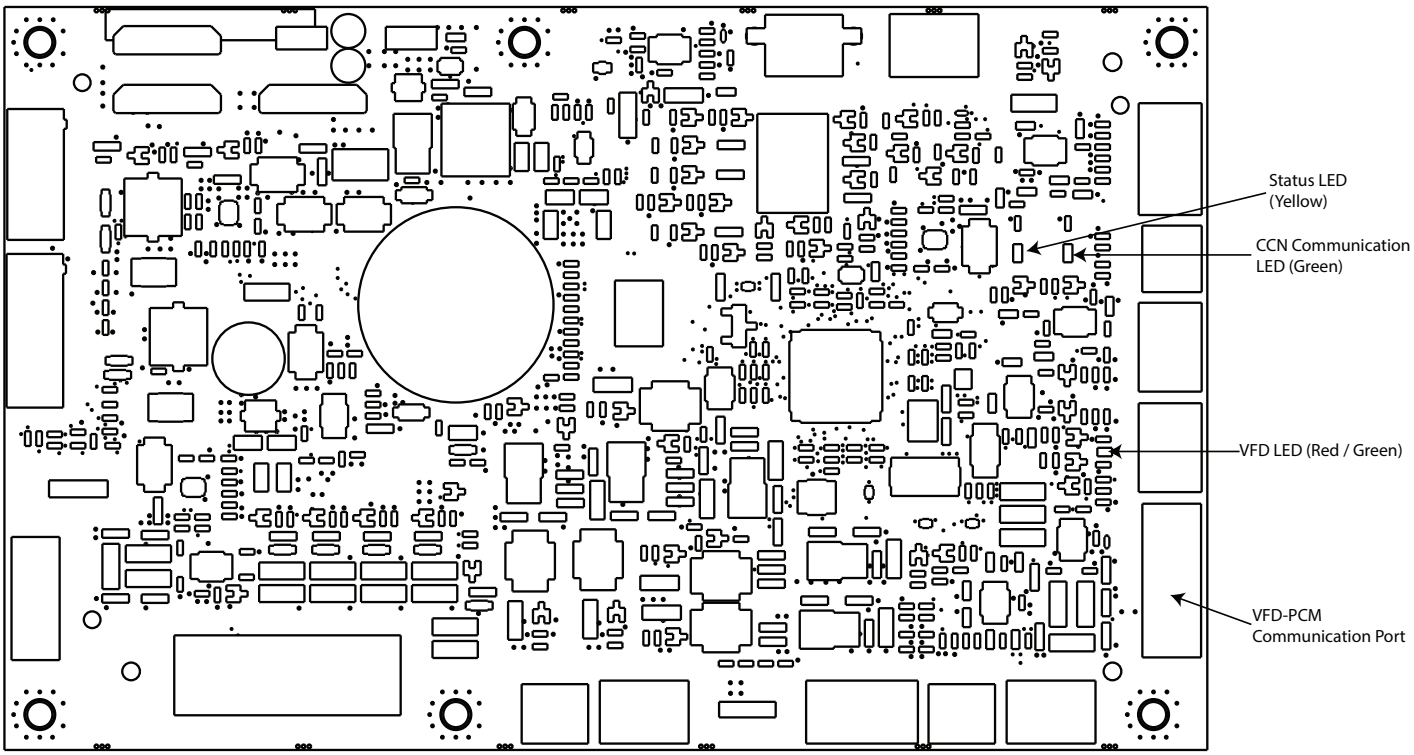

Fig. 27 – Primary Control Board

A200044

Amber Status Light

The operation modes and meaning for each mode of the status light is described in the table below for PCM SW versions 4.0 and above.

Mode	Meaning
Off	Power is removed from the PCM or there is a fundamental PCM fault.
On	Equipment is in standby with no diagnostic conditions preventing or limiting operation.
1 Slow Flash	Equipment is operating at low capacity (low stage in emergency mode).
2 Slow Flashes	Equipment is operating at high capacity (high stage in emergency mode).
Continuous Slow Flash	Equipment operation has been interrupted or is being limited.
Continuous Fast Flash	Equipment is in a lockout condition as a result of a diagnostic condition or is in Diagnostic Code Recall mode.

5x7 LED Matrix

The Primary Control Module (PCM) is equipped with a 5x7 LED matrix. This matrix will display the 4 highest priority diagnostic codes in a scrolling fashion with 2 seconds in between each code. At the end of the 4th highest priority diagnostic code there is a 5 second pause before the list repeats.

VFD Communications Light

The PCM is equipped with a bi-color LED for indicating successful or unsuccessful communication with the VFD. This LED is located just below the VFD-PCM communication port on the PCM. The LED will flash green when good messages are received from the VFD and red when bad or no messages are received from the VFD.

Bluetooth® Module

This unit is equipped with a module, which includes Bluetooth wireless technology that allows a user to connect via an application on a phone or tablet. It is recommended that the Bluetooth Module be activated during the installation process.

Follow these steps to download and activate Bluetooth Module:

1. Download the app
   – Search the App Store™ or Google Play™ for Carrier Service Technician to download. The app is available on phone and tablet devices. If you already have the app downloaded, please ensure you have updated to latest version.

To Activate Bluetooth Module:

1. Login to the Carrier Service Technician app using your HVACPartners username and password.
2. On the App Home screen, tap the Connect to Equipment button. Please ensure your equipment is powered on and your mobile device is within 10 feet of the equipment throughout this whole process

NOTE: In order to connect to equipment using Bluetooth, you must have Bluetooth enabled on your mobile device, and you must allow the Service Tech app to access Bluetooth and location services in your device permissions. For more information on how to enable these features and permissions, please consult documentation from your device manufacturer.

3. The app will scan for nearby Bluetooth enabled equipment. To activate a new unit, the app will display "New Equipment". Tap on that item and then select the Pair button
4. The app will display the equipment Serial and Model number. Please confirm these are correct for the equipment you are trying to activate and tap continue.
5. The app will now automatically progress through the activation process. Once the steps are complete, the unit is activated successfully and your device will be automatically paired to the equipment.

NOTE: You will only have to perform this activation once and you will now be able to pair to this equipment directly with the app in the future.

Variable Frequency Drive (VFD)

The inverter or variable frequency drive (VFD) is located inside the control box. This is an air-cooled device that communicates with the PCM and drives the compressor to the demanded RPM. The VFD provides DC voltage to the fan motor and sends a fan RPM signal to the electronics on the fan motor. The VFD changes the line voltage to 300 volts 3-phase, and varies the frequency to drive the compressor at the desired RPM.

The VFD is equipped with several LEDs that indicate different statuses. see Table 3 and Fig. 28.

Table 3 – VFD LED Indicator Functions

LED Identification	Color	Function
R1	Red	Used to indicate that high voltage is present in the DC capacitors. If this LED is lit then a DC voltage greater than 40V is present.
G1	Green	Blinks when the VFD receives a message from PCM.
G2	Green	On when VFD is in normal status. It is off when VFD is fault status.
G3	Green	On when the VFD microcontroller relay is closed. The signal of relay is controlled by PCM.
A1	Amber	On when 12V source is normal.
A2	Amber	On when the main relay is closed.

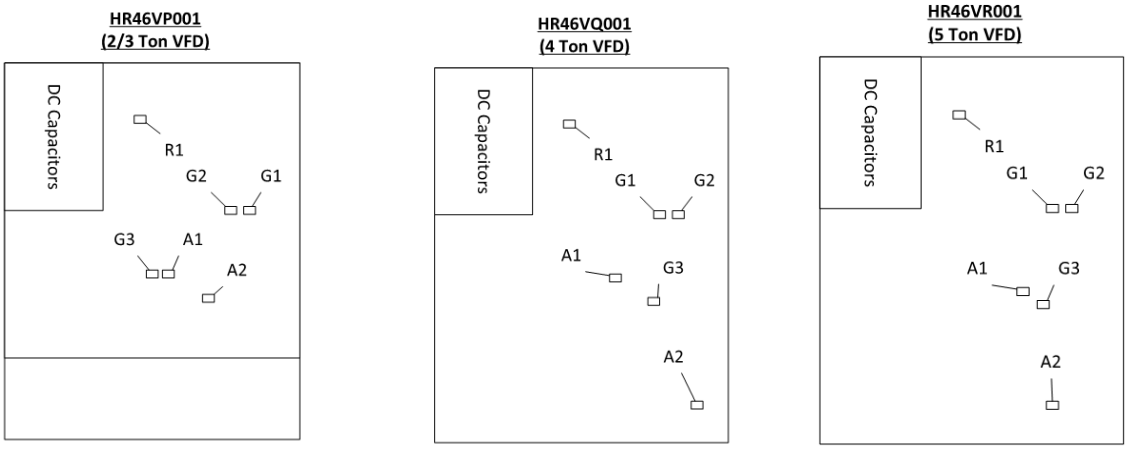

Fig. 28 – VFD LED Indicators

⚠ WARNING

ELECTRICAL HAZARD - HIGH VOLTAGE

Failure to follow this warning could result in personal injury or death.

Elecrical components may hold charge. **DO NOT** remove control box cover for 2 mintues after power has been removed from unit.

PRIOR TO TOUCHING COMPONENTS:

Verify zero (0) voltage at inverter connections shown on inverter cover.

Input Filter Board

The input filter board connects the line voltage to the VFD. The input filter board ensures the inherent electrical noise generated by VFD does not affect other electronics in the household and contains fuses to protect against excess input current.

Reactors

There are either 1 or 2 reactors per model. These reactors are large inductors and must be connected to the VFD to operate.

Variable Speed Compressor

This unit contains a high-side variable speed compressor that has a wide operating range. Some models contain variable speed rotary compressors while others contain variable speed scroll compressors. All of the variable speed compressors operate on 300VDC provided by the inverter. This compressor can only be operated by the specific inverter supplied with the unit.

⚠ CAUTION

EQUIPMENT DAMAGE HAZARD

Failure to follow this caution may result in equipment damage.

Do not attempt to apply line voltage directly to the compressor. This will destroy the compressor

Time Delays

The unit time delays include:

- Five minute time delay to start cooling or heating operation when there is a call from the user interface. To bypass this feature, momentarily short and release Forced Defrost pins.
- Five minute compressor re-cycle delay on return from a brown-out condition.

Heating Electronic Expansion Valve (EXV-H)

This unit uses an electronic expansion valve for refrigerant metering in the heating mode. The control board drives the EXV to its proper position based on the operating mode and conditions.

Vapor Injection Electronic Expansion Valve (EXV-VI)

Some models in this product family contain a secondary EXV for controlling the vapor injection circuit. This circuit is comprised of a brazed plate heat exchanger (BPHE), an EXV (EXV-VI) and interconnecting tubing. The PCM drives this EXV closed except for in high ambient cooling and low ambient heating in efficiency mode. The control of the vapor injection circuit allows greater capacity and efficiency than when not operational.

BLDC Inverter-Controlled Fan Motor

The fan motor included in this unit is a Brushless DC motor with an integrated control module. The control module is supplied DC voltage from the VFD. The speed command is provided from the VFD through a 0-5V signal. The commanded speed is determined by the PCM and is communicated through Modbus to the VFD. The motor cannot be connect to line voltage. Fan motor speed varies based on outdoor ambient temperature and compressor speed. The fan motor will not operate during defrost and may cycle off and on if extremely low airflow is desired.

Pressure Equalization Valve (PEV)

The PEV is located at the discharge of the compressor and the inlet to the accumulator. The purpose of the PEV is to prevent the compressor from starting with a high pressure differential, which can cause compressor damage. Occasionally the unit may experience a brief starting delay while the PEV equalizes pressure before startup.

High Pressure Switch

This unit contains a high pressure switch to protect against high pressure conditions. This switch must be closed for the VFD to be powered.

Outdoor Pressure Transducers

There are two pressure transducers installed on this unit. One is located at the discharge of the compressor and the other is located at the suction of the compressor. These are labeled as "P1" and "P2" on the PCM and the connection to the control board can be interchanged without impacting the pressure measurements or system control. These transducers have a range from 0 to 620 psig and are used for system protection, calculating superheats, and diagnostics.

Stator Heater Operation

This unit has an internal stator heating function. The compressor windings will occasionally be energized during the OFF cycle to start the stator heat operation, thus maintaining a sump temperature that is essential for compressor reliability. The compressor will not run during this process. PCM software version 5.0 or above is required for stator heat operation.

Infinity Controlled low ambient cooling

This unit is capable of low ambient cooling down to 0F (-17.8C) with Low Ambient enabled on the Infinity Control. A low ambient kit is not required.

The Infinity Control provides an automatic evaporator coil freeze protection algorithm that eliminates the need for an evaporator freeze thermostat. The only accessory that may be required is wind baffles in locations which are likely to experience cross winds in excess of 5 miles an hour. This generally occurs only on roof and open area applications.

Low ambient cooling must be enabled in the User Interface setup. The outdoor unit fan will cycle on and off based on outdoor coil temperature, outdoor air temperature, and suction pressure measurements to keep the compressor running at the proper conditions.

Defrost

This user interface (UI) offers 5 possible defrost interval times: 30, 60, 90, 120 minutes, or AUTO. The default is AUTO.

Defrost interval times: 30, 60, 90, and 120 minutes or AUTO are selected by the Infinity Control User Interface (dip switches are not used.)

AUTO defrost adjusts the defrost interval time based on the last defrost time as follows:

- When defrost time <3 minutes, the next defrost interval=120 minutes.
- When defrost time 3-5 minutes, the next defrost interval=90 minutes.
- When defrost time 5-7 minutes, the next defrost interval=60 minutes.
- When defrost time >7 minutes, the next defrost interval=30 minutes.

The control board accumulates compressor run time when the coil temperature is below 32°F. When accumulated run time approaches the selected defrost interval a defrost is initiated. Upon initial power up the first defrost interval is defaulted to 30 minutes. Remaining intervals are at selected times. Defrost is only allowed to occur when the coil temperature is below 35°F.

Defrost termination will occur when the OCT reaches a predetermined temperature. This temperature varies based on unit model and OAT. If maximum allowable defrost time has expired and OCT has not reached the predetermined temperature, the system will resume heating operation.

NOTE: Compressor speed during defrost varies based on outdoor conditions and unit model

Troubleshooting

Systems Communication Failure

If communication with the Infinity control is lost with the User Interface (UI), the control will flash the appropriate fault code (see Table 8). Check the wiring to the User Interface and the indoor and outdoor units and power.

Model Plug

Each control board contains a model plug. The correct model plug must be installed for the system to operate properly (see Table 4).

Table 4 – Model Plug Information

MODEL NUMBER	MODEL PLUG NUMBER	PIN RESISTANCE (K-ohms)	
		Pins 1-4	Pins 2-3
25VNA424	HK70EZ003	5.1K	24K
25VNA436	HK70EZ015	5.1K	360K
25VNA448	HK70EZ027	11K	150K
25VNA460	HK70EZ039	18K	62K

The model plug is used to identify the type and size of unit to the control.

On new units, the model and serial numbers are input into the board's memory at the factory. If a model plug is lost or missing at initial installation, the unit will operate according to the information input at the factory and the appropriate error code will flash temporarily. An RC replacement board contains no model and serial information. If the factory control board fails, the model plug must be transferred from the original board to the replacement board for the unit to operate.

⚠ CAUTION

EQUIPMENT DAMAGE HAZARD

Failure to follow this caution may result in equipment damage and/or improper operation.

Do not attempt to install an incorrect model plug as this could cause some units to operate incorrectly and fail prematurely.

NOTE: The model plug takes priority over factory model information input at the factory. If the model plug is removed after initial power up, the unit will operate according to the last valid model plug installed, and flash the appropriate fault code temporarily.

Pressure Switch Protection

The outdoor unit is equipped with high pressure switch. If this switch opens the VFD will lose line power and the compressor and fan motor will not operate. The high pressure switch opens at 670 +/- 10 psig and closes at 470 +/- 25 psig. If this occurs the PCM will set a diagnostic code per table 7. The outdoor pressure transducer installed at the discharge of the compressor is monitored by the PCM and the PCM will take action to avoid the high pressure switch from opening.

Compressor Protection

The Primary Control Module continuously monitors the operation of the compressor and takes action when it is nearing the edge of the boundaries of reliable operation. The PCM utilizes the pressure transducers to maximize the reliability and minimize the off time of the system due to operation outside of the compressor boundaries. The PCM takes different actions for each edge of the boundary, but each culminates in a reduction of compressor speed to the minimum allowable and, in the worst case, will power off the compressor to avoid excursions outside the boundaries. If a shutdown does occur then the PCM will set a diagnostic code per Table 8.

Line Voltage Diagnostics

The primary control module monitors the line voltage for low and high voltage events. If a low voltage or high voltage event occurs and another fault occurs simultaneously the PCM will set a fault that indicates this was due to the system conditions and not the components. If this occurs several times in a row the PCM will set a malfunction and lock out operation for 1-4 hours, depending on the condition. Refer to Table 8 for the list of fault codes and Table 9 for the list of malfunctions and the lockout times for each one.

Forced Defrost Pins (J9)

The forced defrost pins have several functions. When shorting the pins using a clip wire the below functions can be executed:

"If the pins are shorted for more than 5 seconds and the unit is in heating mode then the unit will enter into a defrost.

"If the pins are shorted more than 1 seconds and less than 5 seconds when the system has just turned off and an active call for cooling or heating is present the 5 minute initial on-time will be defeated.

"If the unit is in the OFF mode and the pins are shorted at power on the unit will enter into Status Code Recall Mode.

Temperature Thermistors

Thermistors are electronic devices which sense temperature. As the temperature increases, the resistance decreases. Thermistors are used to sense outdoor air (OAT), coil temperature (OCT), the suction line thermistor (OST) between the reversing valve and the accumulator, and the outdoor discharge thermistor (ODT) at the outlet from the compressor.

Refer to Table 5 and Table 6 for resistance values versus temperature for the OAT, OCT, and OST.

Table 5 – Resistance Values versus Temperature

TEMPERATURE	RESISTANCE (ohms)
25.0°C (77.0°F)	10.0 + / - 2.3%
0.0°C (32.0°F)	32.6 + / - 3.2%
-17.8°C (0 °F)	85.5 + / - 3.4%

Table 6 – ODT Resistance Values versus Temperatures

TEMPERATURE (°C)	RESISTANCE (K OHMS)
25	50.15 + / - 5.0%
75	7.565 + / - 3.0%
125	1.7 + / - 1.4%

If the outdoor air or coil thermistor should fail, the control will flash the appropriate fault code (see Table 8.)

IMPORTANT: The outdoor air thermistor, coil thermistor and suction thermistor should be factory mounted in the final locations. Check to ensure thermistors are mounted properly (See Fig. 29, Fig. 30 and Fig. 31).

Outdoor Air Thermistor

The outdoor air thermistor is a 10Kohm resistor used for multiple system operations. It provides the outdoor air temperature to the primary control module and user interface. It is essential for controlling the system and is used in almost all modes of operation. The sensor is mounted in the control box per Fig. 29.

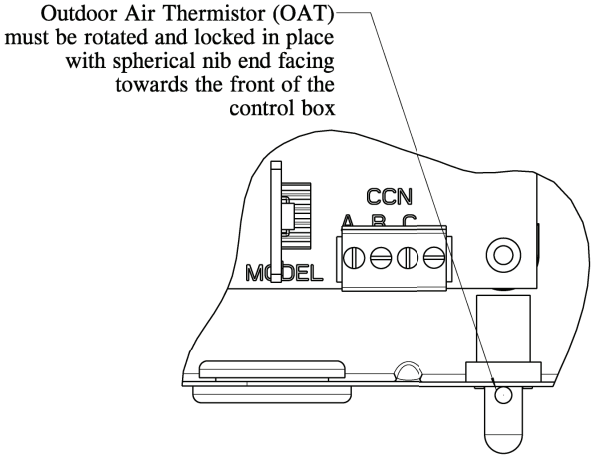

A200045

Fig. 29 – Outdoor Air Thermistor Mounting Location

Outdoor Coil Thermistor

The outdoor coil thermistor is a 10Kohm resistor used for multiple system operations. It provides the coil/liquid line temperature to the primary control module and user interface. It is used for low ambient operation, defrost initiation, defrost termination and assistance with OAT temperature measurement. The sensor must be securely mounted to the tube connecting the EXV and distributor. See Fig. 30 for proper placement. See Table 5 for proper resistances.

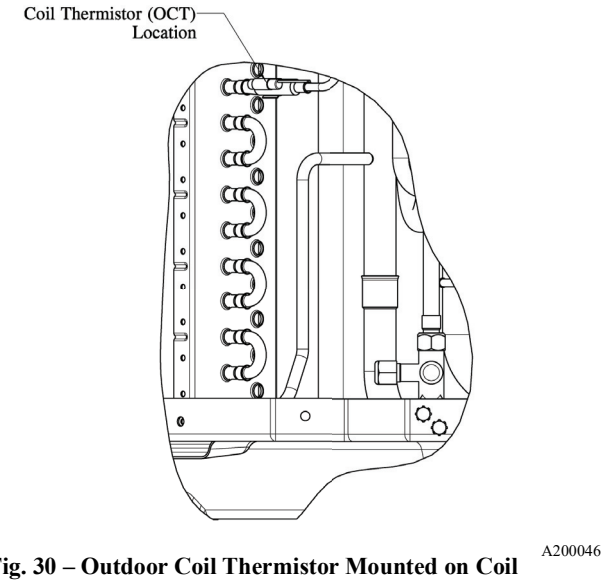

Fig. 30 – Outdoor Coil Thermistor Mounted on Coil

Suction Thermistor (OST)

Suction Thermistor is used for assisting in EXV control and must be secured on the suction tube and aligned longitudinally to the vertical surface of the tube axis (see Fig. 31).

Discharge Thermistor (ODT)

Discharge thermistor is used for protection against over temperature of the compressor and the discharge superheat calculations. Proper mounting is required to ensure that the unit exits the start-up mode. The ODT is located on the compressor discharge stub-out (see Fig. 31).

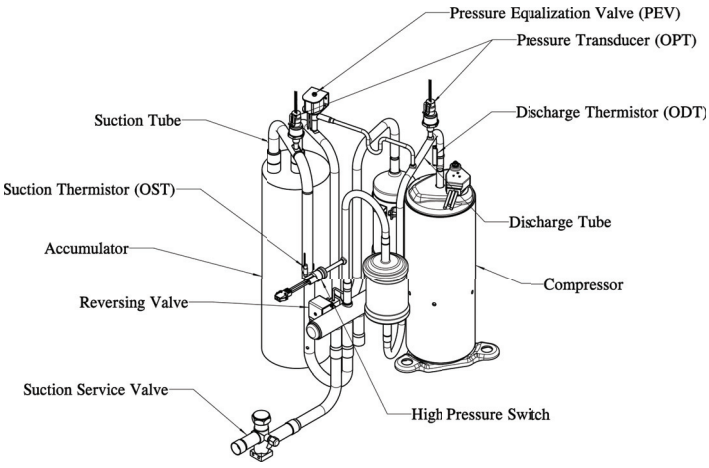

Fig. 31 – Suction Thermistor (OST) and Discharge Thermistor (ODT) Mounting Locations

⚠ CAUTION

EQUIPMENT DAMAGE HAZARD

Failure to follow this caution may result in equipment damage and/or improper operation.

In order to minimize the ambient influence, make sure the thermistor curved surface hugs the pipe surface and is secured tight using the wire tie fished through the original slot, insulating polymer body.

Failed Thermistor Default Operation

Factory defaults have been provided in the event of failure of outdoor air thermistor (OAT) and/or outdoor coil thermistor (OCT).

If the OAT sensor should fail the outdoor unit will operate at a fixed speed. Defrost will be initiated based on coil temperature and time.

If the OCT sensor should fail the outdoor unit will operate at a fixed speed. Defrost will occur at each 60 minute time interval during heating operation, but will terminate after 10 minutes.

If the OST should fail then the outdoor unit will continue to operate in cooling without modification, but heating operation will not be allowed.

Variable Speed Compressor Winding Resistance

This compressor operates with 3-phase variable frequency PWM variable voltage. For troubleshooting certain fault codes related to compressor resistances, follow these steps:

1. Disconnect compressor power leads from the inverter terminals, U (YEL), V (RED), and W (BLK).
2. Measure the resistance between YEL to RED, YEL to BLK, and RED to BLK and compare to Table 7 values. Each resistance set should be equal.
3. Measure the resistance to ground for each lead.
4. If the resistances are correct then reconnect power leads to appropriate terminal.
5. If the resistances appear to be abnormal, it will be necessary to measure the resistance at the compressor fusite terminals.
6. Remove the sound blanket and harness plug, measure the resistances, and compare to Table 7.
7. Reinstall compressor sound blanket making sure discharge thermistor and compressor power harness are routed as they were from the factory

Table 7 – Variable Speed Compressor Resistances (winding resistance at 68°F? (20°F)

WINDING	24	36	48	60
Between terminals T1, T2, and T3	.74	.453	.424	.424
Between terminal & ground	>1 mega OHM			

⚠ CAUTION

EQUIPMENT DAMAGE HAZARD

Failure to follow this caution may result in equipment damage and/or improper operation.

Do not use Meggar for measuring the winding resistance.

Fan Motor

The fan motor requires 5 wires connected to VFD for operation. These wires are: DC BUS, GND, +15V DC, Vsp, FG. Note high voltage may be present on ALL wires because they are not earth or chassis ground referenced. Do not attempt to measure voltages while running. Fan speed is monitored by VFD and PCM continuously. If fan faults occur verify the fan blade rotates freely without obstruction. Ensure all electrical connections are secure and wires are undamaged.

Status Codes

Table 8 shows the status codes flashed by the amber status light. Most system problems can be diagnosed by reading the status code as flashed by the amber status light on the control board.

The codes are flashed by a series of short and long flashes of the status light. The short flashes indicate the first digit in the status code, followed by long flashes indicating the second digit of the error code.

The short flash is 0.25 seconds ON and the long flash is 1.0 second ON. Time between flashes is 0.25 seconds. Time between short flash and first long flash is 1.0 second. Time between code repeating is 2.5 seconds with LED OFF.

Codes are easily read from user interface (UI) or the 5x7 LED display on the PCM

EXAMPLE:

3 short flashes followed by 2 long flashes indicates a 32 code. Table 8 shows this to be low pressure switch open.

Status Code Recall Mode

Active status codes are stored in memory even when power is absent. The most recent flashing status code (highest priority active) can be recalled from memory via Status Code Recall Mode is accessed by shorting (use a clip wire) the "force defrost" connector (labeled J2 on the board, see Fig. 32) and then power ON the unit.

Please make sure the unit is turned OFF before shorting the pins. Status Code Recall Mode will continue as long as the "force defrost" terminals remain shorted. The unit will not attempt to heat or cool while the terminals remain shorted. Once the status code is read, power-down the unit and remove the short.

Emergency Mode Connections with a Conventional Thermostat

The conventional thermostat inputs is designed to work for emergency operation only. Connections are Y1, Y2, O, W and C. When Y1 is energized the outdoor unit will operate at speeds equivalent to 1.5, or median, demand. When Y1 and Y2 are energized, the system will operate at maximum capacity.

In an emergency, it is possible to replace the UI with a conventional heat pump thermostat (must be dual fuel capable if using a furnace), see Fig. 32 for wiring. Refer to Step 14 for more information.

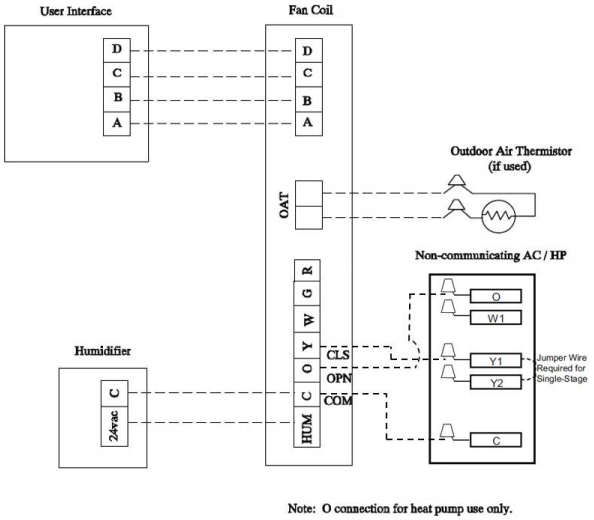

Fig. 32 – Variable Speed Unit Connected to a Conventional Dual Fuel Thermostat in an Emergency Mode

Table 8 – Fault Code Table

Code*			Description
Base	Expansion		
	Fault**	Malfunction***	Bluetooth®
13	82	53	Systen Control Upgrade Recomended
14	94		Line Voltage Low
15	94		Line Voltage High
17	06		PCM-Bluetooth Module Communication Failure
18	11		Indoor Coil Freeze Protection
24		58	5V PCM External Power Out of Range
25		61	Invalid Model Plug
	22	62	Model Plug Missing
	24		Model Plug Changed
		63	VFD/Equipment Model Mismatch
26	26		PCM MCU Old Version
	27		PCM Reprogramming Failure
	31		EEPROM Write Failure
28		71	Fuse 1 Open (PEV / RVS)
		72	Fuse 2 Open (LLV)
31	11	58	Compressor High Pressure Limit
	16		High Pressure Switch Trip
	19		High Pressure Disable
32	15	55	Compressor Low Pressure Limit
		59	Low Pressure Disable
33	15	55	Compressor Low Discharge Limit
34	11	58	Compressor High Temperature Limit
35	11	58	Compressor High Compression Limit
36	15	55	Compressor Low Compression Limit
38	13	53	Compressor Starting Error
		54	Compressor No Pump
	18		High Differential Pressure Start Disable
	31	71	VFD Estimator Error
39	13	53	Fan Start Error
	14		Fan Speed Error
	15	55	Unexpected Fan Shutdown
		58	Fan Motor Error
41	13		Defrost Overrun
44	13		PEV Timeout
51	01		OAT (Outdoor Air Thermistor) Open/Low Temp
	02		OAT (Outdoor Air Thermistor) Shorted/High Temp
52	01		OCT (Outdoor Coil Thermistor) Open/Low Temp
	02		OCT (Outdoor Coil Thermistor) Shorted/High Temp
53		41	OST (Outdoor Suction Thermistor) Open/Low Temp
		42	OST (Outdoor Suction Thermistor) Shorted/High Temp
54	01		ODT (Outdoor Discharge Thermistor) Open/Low Temp
	02		ODT (Outdoor Discharge Thermistor) Shorted/High Temp
57	01	41	P1 Open
	02	42	P1 Shorted
		43	P1 Sensor Error
58	01	41	P2 Open
	02	42	P2 Shorted
		43	P2 Sensor Error
61		41	Reversing Valve Solenoid Open
	13	53	Reversing Valve Timeout
62	01		PEV Solenoid Open

Table 8 – Fault Code Table (Continued)

Code*			Description
Base	Expansion		Bluetooth©
	Fault**	Malfunction***	
64		41	EXV-H Phase Open
		44	EXV-H Power Short to Ground
		45	EXV-H Phase Short to Ground
65		41	EXV-VI Phase Open
		44	EXV-VI Power Short to Ground
		45	EXV-VI Phase Short to Ground
66		41	VFD Control Relay Coil Open
		42	VFD Control Relay Coil Shorted
81	13	53	PFC Error
	14	54	Unbalanced PFCM Error
		58	VFD System Wiring Error
82	11		VFD Line Current Speed Reduction
	13	53	VFD Reset with Power Dropout
	15	55	VFD Shutdown with Power Dropout
	16	56	Low Voltage Shutdown
	17	57	High Voltage Shutdown
83	11		Compressor Current Limit 1 Speed Reduction
	12		Compressor Current Limit 2 Speed Reduction
	15	55	Compressor Current Limit 3 Shutdown
	16	56	Compressor Current Limit 4 Shutdown
		57	Compressor Underspeed Shutdown
84	11	58	VFD Heat Sink Overtemp Shutdown
85	13	53	DC Under Voltage Shutdown
	14	54	DC Over Voltage Shutdown
86	06	46	VFD Communication Error
87	13	53	VFD Initialization Error
88	15	55	Unexpected VFD Reset
	27		VFD Reprogramming Failure
	31	71	VFD Internal Error - Current Sensor
	32		VFD Internal Error - IPM Temp Sensor
	33	73	VFD Internal Error - DC Link Sensor
	34	74	VFD Internal Error - PFCM Sensor A
	35	75	VFD Internal Error - PFCM Sensor B
	36	76	VFD Internal Error - Line Volt Sensor
	37		VFD Internal Error - PFCM Temp Sensor
	38	78	VFD Internal Error - DC Discharge
	39	79	VFD Internal Fault - Microprocessor
*Code is reported by the thermostat			

Table 9 – Malfunction Lockout Durations

Code	Title	Time
24-58	5V PCM External Power Out of Range	Duration of Event
25-61	Invalid Model Plug Malfunction	Duration of Event
25-62	Model Plug Missing Malfunction	Duration of Event
25-63	VFD Model Mismatch	Permanent*
28-71	Fuse 1 Open Malfunction	Permanent*
28-72	Fuse 2 Open Malfunction	Permanent*
31-58	Compressor High Pressure Limit Malfunction	2 hours
32-55	Compressor Low Pressure Limit Lockout	2 hours
32-59	Low Pressure Disable	Permanent*
33-55	Compressor Low Discharge Limit Lockout	2 hours
34-58	Compressor High Temperature Limit Malfunction	2 hours
35-58	Compressor High Compression Limit Malfunction	2 hours
36-55	Compressor Low Compression Limit Lockout	2 hours
38-53	Compressor Starting Malfunction	4 hours
38-54	Compressor No Pump	30 minutes
38-71	VFD Estimator Malfunction	4 hours
39-53	Fan Start Malfunction	1 hour
39-55	Unexpected Fan Shutdown Malfunction	4 hours
39-58	Fan Motor Malfunction	30 minutes
53-41	OST Open / Low Temp	Duration of Event
53-42	OST Shorted / High Temp	Duration of Event
57-41	P1 Open Malfunction	Duration of Event
57-42	P1 Shorted Malfunction	Duration of Event
57-43	P1 Sensor Malfunction	Permanent*
58-41	P2 Open Malfunction	Duration of Event
58-42	P2 Shorted Malfunction	Duration of Event
58-43	P2 Sensor Malfunction	Permanent*
61-41	Reversing Valve Solenoid Open	Duration of Event
61-53	Reversing Valve Timeout Malfunction	2 hours

* unlikely to clear on its own; see Service Manual for troubleshooting steps

Table 9 – Malfunction Lockout Durations (Continued)

Code	Title	Time
64-41	EXV-H Phase Open	Duration of Event
64-44	EXV-H Power Short to Ground	Duration of Event
64-45	EXV-H Phase Short to Ground	Duration of Event
65-41	EXV-VI Phase Open	Duration of Event
65-44	EXV-VI Power Short to Ground	Duration of Event
65-45	EXV-VI Phase Short to Ground	Duration of Event
66-41	VFD Control Relay Coil Open	Duration of Event
66-42	VFD Control Relay Coil Shorted	Duration of Event
81-53	PFC Malfunction	1 hour
81-54	Unbalanced PFCM Malfunction	4 hours
81-58	VFD System Wiring Error	4 hours
82-53	VFD Reset with Power Dropout Malfunction	1 hour
82-55	VFD Shutdown with Power Dropout Malfunction	2 hours
82-56	Low Voltage Shutdown Malfunction	1 hour
82-57	Line Over Voltage Malfunction	1 hour
83-55	Compressor Current Limit 3 Lockout	2 hours
83-56	Compressor Current Limit 4 Lockout	2 hours
83-57	Compressor Underspeed Shutdown	1 hour
84-58	VFD Overtemp Malfunction	2 hours
85-53	DC Under Voltage Malfunction	1 hour
85-54	DC Over Voltage Malfunction	1 hour
86-46	VFD Communication Malfunction	1 hour
87-53	VFD Initialization Malfunction	4 hours
88-55	Unexpected VFD Reset Malfunction	1 hour
88-71	VFD Internal Malfunction - Current Sensor	4 hours
88-73	VFD Internal Malfunction - DC Link Sensor	4 hours
88-74	VFD Internal Malfunction - PFCM Sensor A	4 hours
88-75	VFD Internal Malfunction - PFCM Sensor B	4 hours
88-76	VFD Internal Malfunction - Line Volt Sensor	4 hours
88-78	VFD Internal Malfunction - DC Discharge	4 hours
88-79	VFD Internal Malfunction - Microprocessor	4 hours

Manufacturer reserves the right to change, at any time, specifications and designs without notice and without obligations.

FINAL CHECKS

IMPORTANT: Before leaving job, be sure to do the following:

1. Ensure that all wiring is routed away from tubing and sheet metal edges to prevent rub-through or wire pinching.
2. Ensure that all wiring and tubing is secure in unit before adding panels and covers. Securely fasten all panels and covers.
3. Tighten service valve stem caps to 1/12-turn past finger tight.
4. Leave Users Manual with owner. Explain system operation and periodic maintenance requirements outlined in manual.
5. Fill out Dealer Installation Checklist and place in customer file.

CARE AND MAINTENANCE

For continuing high performance and to minimize possible equipment failure, periodic maintenance must be performed on this equipment.

Frequency of maintenance may vary depending upon geographic areas, such as coastal applications. See Owner's Manual for information.

Training

My Learning Center is your central location for professional residential HVAC training resources that help strengthen careers and businesses. We believe in providing high quality learning experiences both online and in the classroom.
Access My Learning Center with your HVACpartners credentials at www.mlctraining.com. Please contact us a mylearning@carrier.com with questions.

The Bluetooth® word mark and logos are registered trademarks owned by Bluetooth SIG, Inc. and any use of such marks by Carrier Corporation is under license. Other trademarks and trade names are those of their respective owners.

©2020 Carrier Corp. All rights reserved.
Edition Date: 02/21

Catalog No:25VNA4-03SI

Replaces: 25VNA4-02SI

Manufacturer reserves the right to change, at any time, specifications and designs without notice and without obligations.